Spindrift Spiked Case Stacker Assembly Instruction
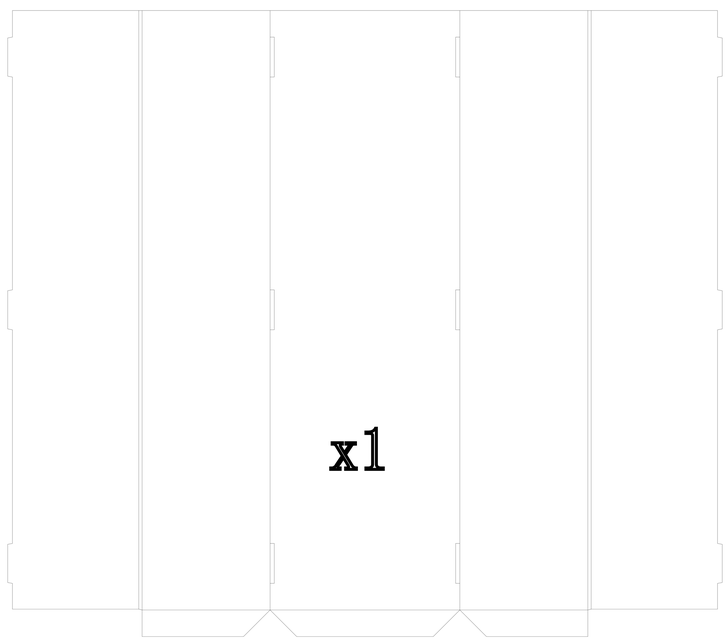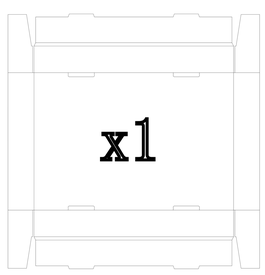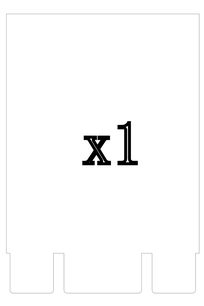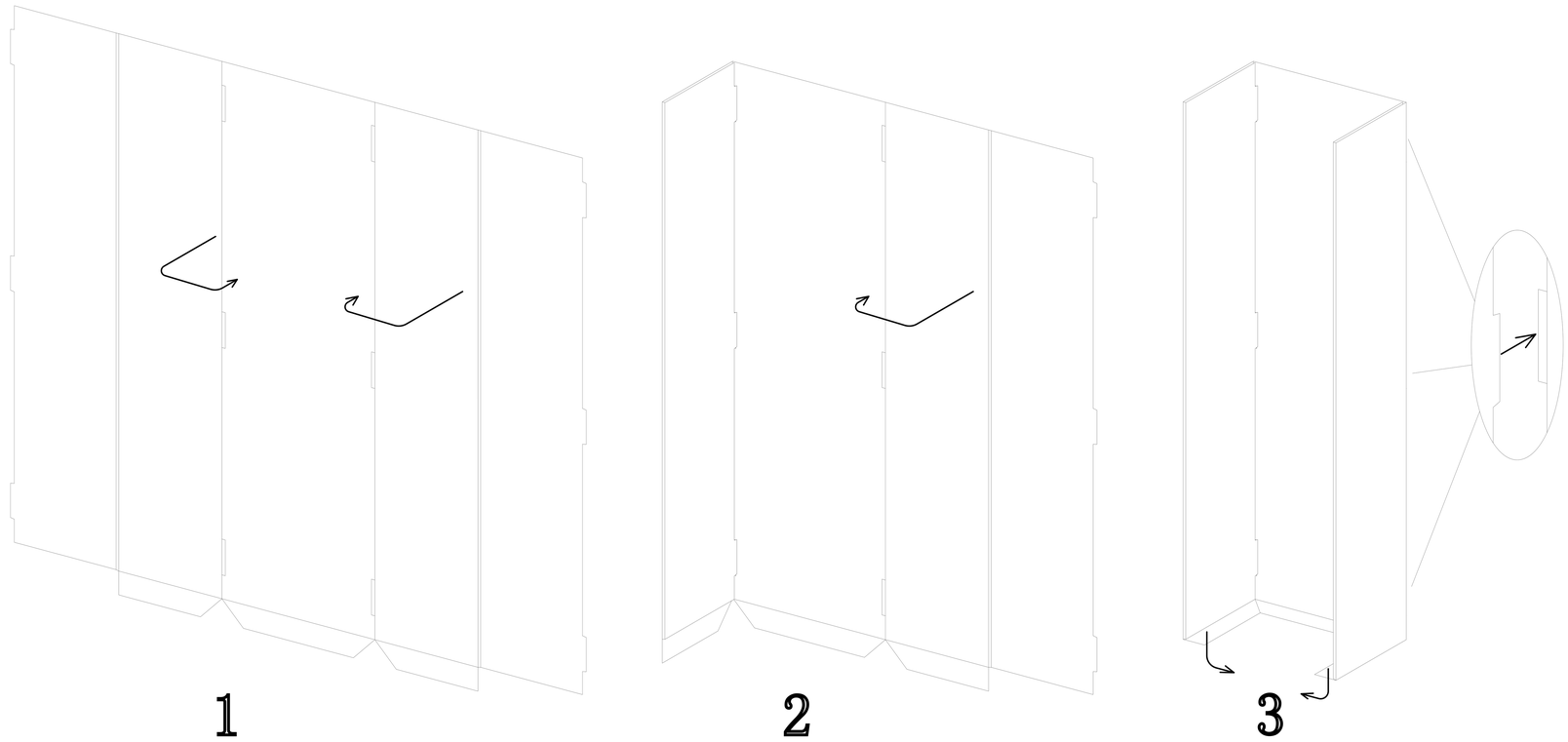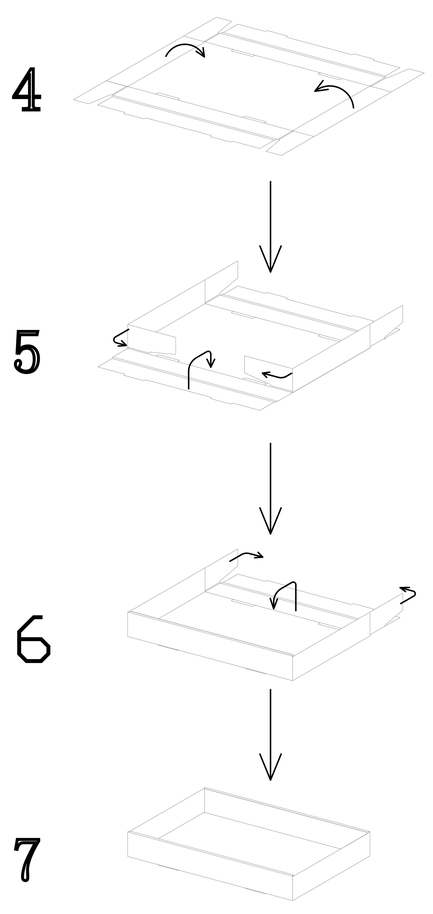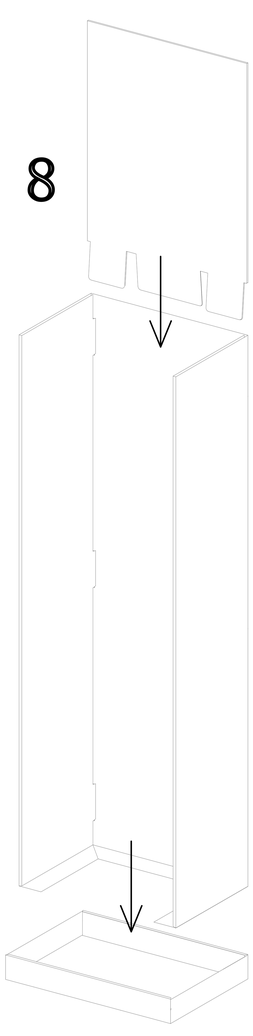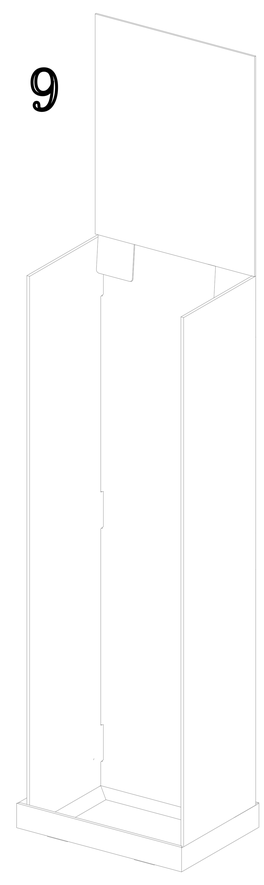
components